DPDK DATA PLANE DEVELOPMENT KIT

THE LINUX FOUNDATION

DPDK | IT大咖说 知识分享平台

INTEL® 25GBE ADVANCED FEATURES FOR NFV

HELIN ZHANG, INTEL®

JINGJING WU, INTEL®

主办方： intel

参与方： 腾讯云 ZTE 美团云 Panabit® 太一星晨 Balance Your Networks UnitedStack 云杉网络 Yunshan Networks

协办方： SDNLAB 专注网络创新技术

视频支持方： IT大咖说

LEGAL DISCLAIMER

- No license (express or implied, by estoppel or otherwise) to any intellectual property rights is granted by this document.
- Intel disclaims all express and implied warranties, including without limitation, the implied warranties of merchantability, fitness for a particular purpose, and non-infringement, as well as any warranty arising from course of performance, course of dealing, or usage in trade.
- This document contains information on products, services and/or processes in development. All information provided here is subject to change without notice. Contact your Intel representative to obtain the latest forecast, schedule, specifications and roadmaps.
- The products and services described may contain defects or errors known as errata which may cause deviations from published specifications. Current characterized errata are available on request.
- Copies of documents which have an order number and are referenced in this document may be obtained by calling 1-800-548-4725 or by visiting: http://www.intel.com/design/literature.htm
- Intel technologies' features and benefits depend on system configuration and may require enabled hardware, software or service activation. Performance varies depending on system configuration. No computer system can be absolutely secure. Check with your system manufacturer or retailer or learn more at intel.com.
-
- *Other names and brands may be claimed as the property of others.
-

Agenda

- Key Hardware Features
- Dynamic Device Personalization (DDP)
- Generic Flow API
- Virtual Function Daemon (VFD)
- Good Performance
- Adaptive Virtual Function (AVF)

Key Hardware Features

- PCIe v3.0, x8
- XXV710, 25GbE Link Speed
  - New addition to Intel® Ethernet 700 Series (10/25/40GbE)
- Network Virtualization offloads
  - VXLAN, NVGRE, GENEVE, VXLAN-GPE with NSH, MPLS, and more
- Input Set for RSS and Flow Director (FD)
  - Up to first 128 bytes can be selected
- 3 HASH Algorithms
  - Toeplitz, Simple XOR, Symmetric Simple XOR

Key Hardware Features for Virtualization

Feature	XXV710	82599EB
SR-IOV support	Yes	Yes
VF to PF mailbox	Yes	Yes
Max Number of Virtual functions	128 per device (globally)	64 per port (single queue)
Max number of Queues	**1536**	128
Max number of queues per VF	**16**	8
Max number of queues per VMDq2 VSI	16	8
Max Number of VMDq2 ports	256 per device (globally)	64 per port (single queue)
MAC addresses	**1024** per device (globally)	128 per port
VLAN tags	**512** per device (global)	64 per port
Queuing to Pool/VSI method	SA, VLAN pairs or SA or VLAN	SA or VLAN or (SA and VLAN)
Cloud filter in Switch	Yes	No
RSS per VF	**Yes**	No (Single RSS used for all VFs).
Switching modes	VEB, VEPA	VEB*
Promiscuous modes per VM	VLAN, Multicast, Unicast	Multicast

Internal Packet Processing

82599EB

- Fixed packets Parse graphic.
- Input set of filtering/steering is fixed.

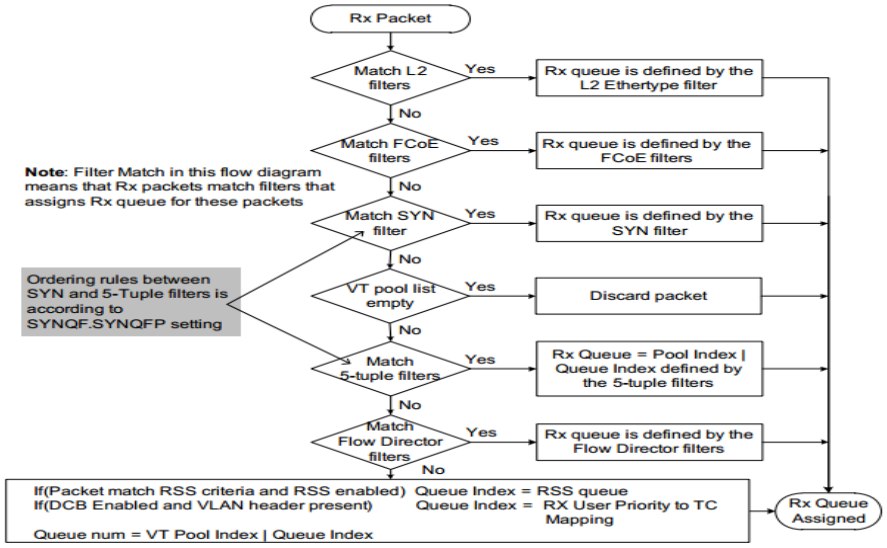

XXV710

- Configurable input set for RSS and FD.
- DDP to support more protocol steering.

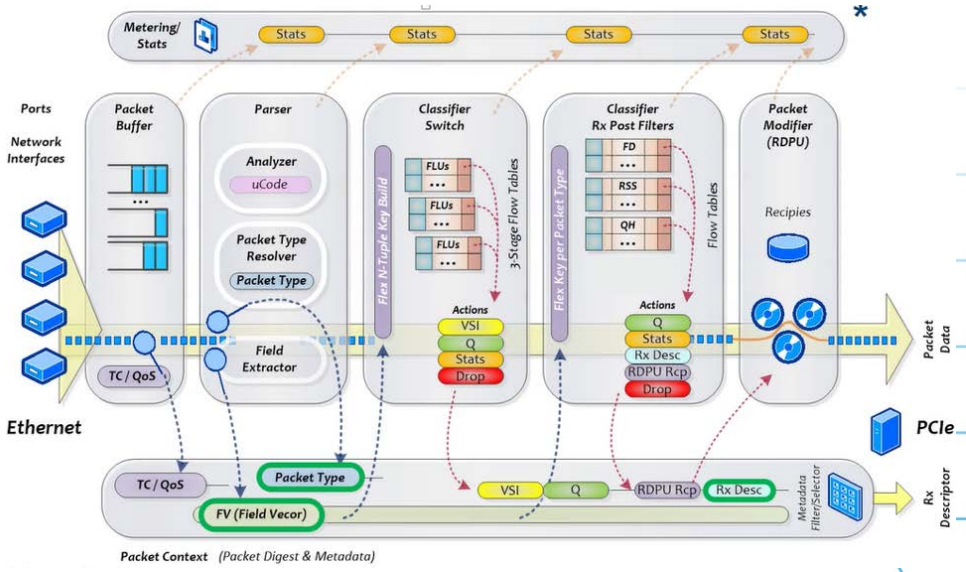

Dynamical Device Personalization (DDP)

- By default, it supported limited protocols, due to hardware resources
  - e.g. VXLAN
- Loadable profiles for packet classification for extra protocols
  - e.g. MPLSoGRE
- Configurable tunnel filters for traffic steering
  - Steering packets to VM queues on QinQ/tunnel ID

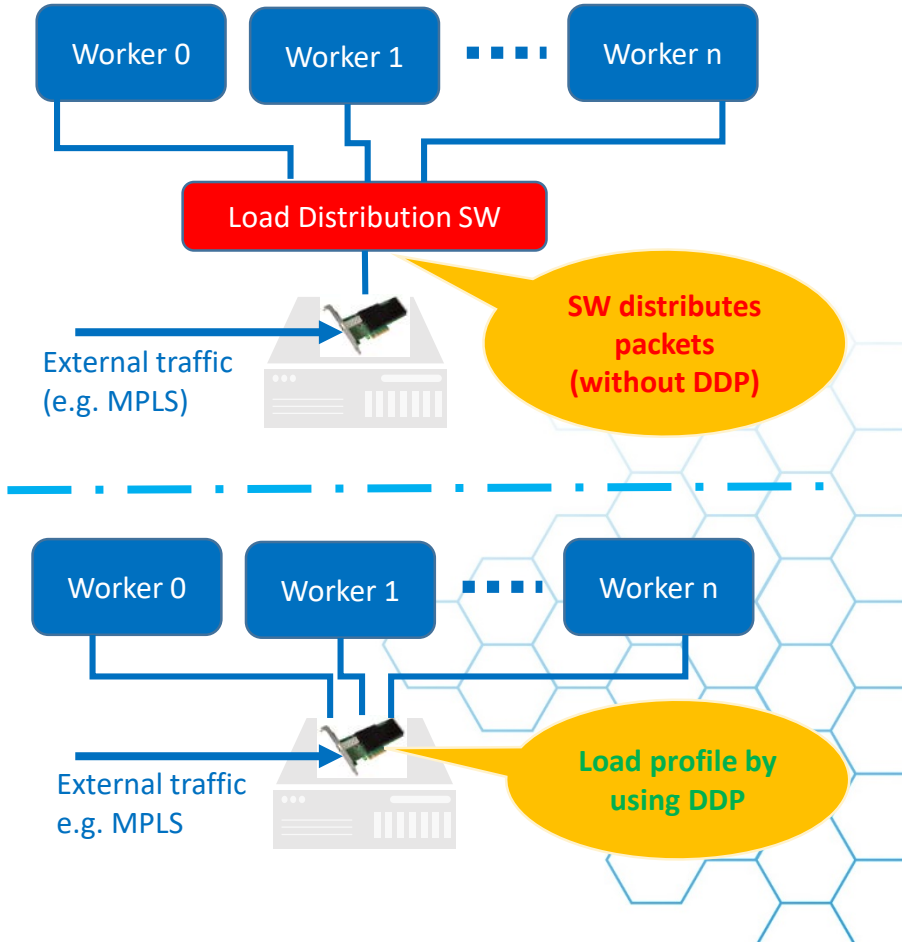

Generic Flow API Support

- A generic way to configure the hardware
  - Don’t need to know the HW specific filters
- Flow rule
  - Attributes
  - Matching pattern
  - Actions
- Rule management
  - rte_flow_validate()
  - rte_flow_create()
  - rte_flow_destroy()
  - rte_flow_flush()

Example

- Direct the VXLAN packet with specific inner MAC and VNI to queue #2.

Friendly, and consistent to applications!

Legacy filter control API

```
struct rte_eth_tunnel_filter_conf tunnel_filter_conf = {
        .outer_mac = {0x11, 0x22, 0x33, 0x44, 0x55, 0x66};
        .inner_mac = {0x00, 0x11, 0x22, 0x33, 0x44, 0x55};
        .inner_vlan = 0;
        .ip_type = RTE_TUNNEL_IPTYPE_IPV4;
        .ip_addr.ipv4_addr = 1;
        .filter_type = RTE_TUNNEL_FILTER_IMAC_TENID;
        .tunnel_type = RTE_TUNNEL_TYPE_VXLAN;
        .tenant_id = 1;
        .queue_id = 2;
};
int ret;

ret = rte_eth_dev_filter_ctrl(port_id, RTE_ETH_FILTER_TUNNEL,
RTE_ETH_FILTER_ADD, &tunnel_filter_conf);
```

Generic flow API

```
const struct rte_flow_item pattern[] = {
        { RTE_FLOW_ITEM_TYPE_ETH, NULL, NULL, NULL},
        { RTE_FLOW_ITEM_TYPE_IPV4, NULL, NULL, NULL},
        { RTE_FLOW_ITEM_TYPE_UDP, NULL, NULL, NULL},
        { RTE_FLOW_ITEM_TYPE_VXLAN, {.vni = 1}, NULL, {.vni = "\xff\xff\xff"}},
        { RTE_FLOW_ITEM_TYPE_ETH,
                {.dst = { 0x00, 0x11, 0x22, 0x33, 0x44, 0x55}}, NULL,
                {.dst = {0xFF, 0xFF, 0xFF, 0xFF, 0xFF, 0xFF}}},
        { RTE_FLOW_ITEM_TYPE_END, NULL, NULL, NULL},
};

const struct rte_flow_action actions[] = {
        { RTE_FLOW_ACTION_TYPE_PF, NULL},
        { RTE_FLOW_ACTION_TYPE_QUEUE, { .index = 2}},
        { RTE_FLOW_ACTION_TYPE_END, NULL},
};
struct rte_flow_error flow_err;

flow_err = rte_flow_create(port_id, NULL, pattern, actions, &flow_err);
```

Virtual Function Daemon (VFD) Support

- DPDK as the host driver to support both DPDK and kernel VF
- Lots of VF management features are added
- Mailbox messages management are added
  - VF requests can be accepted/rejected by VFD
- Kernel driver does not support those features
- Only Intel® Ethernet 500 (ixgbe) and 700 (i40e) series are enabled
- Refer to https://github.com/att/vfd

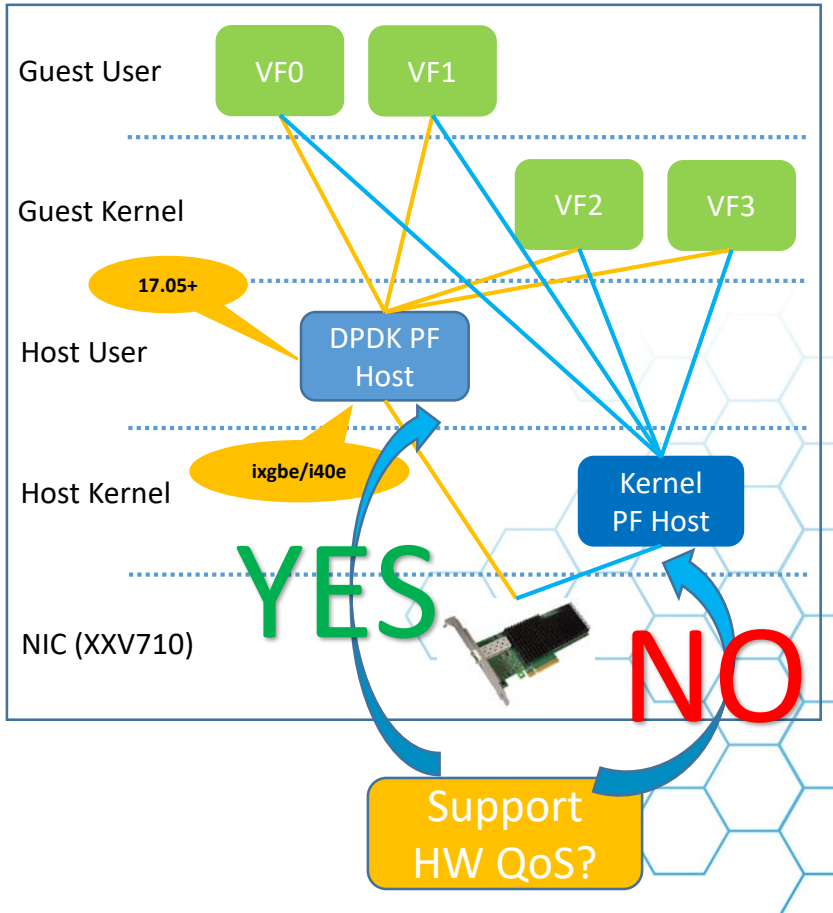

Performance

- 2 Cards

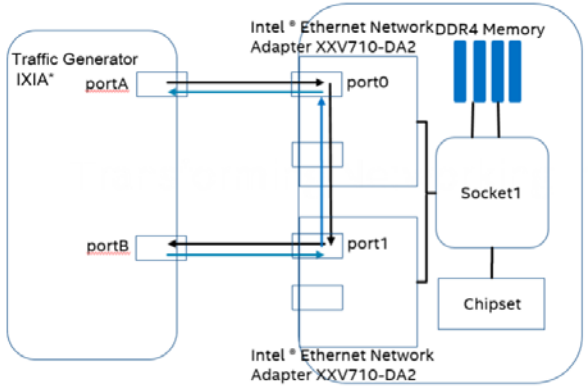

Packet Size (Bytes)	Wire Speed (Mpps)	Packet Rate (Mpps)	%Wire Speed
64	37.2	35.63	95.78%
128	21.1	21.1	100%
256	11.3	11.3	100%

- 1 Cards

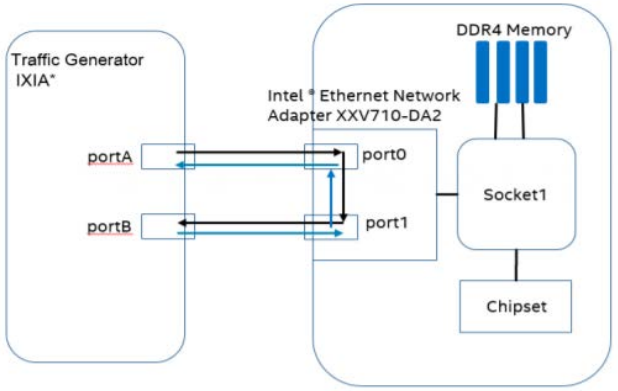

Packet Size (Bytes)	Wire Speed (Mpps)	Packet Rate (Mpps)	%Wire Speed
64	37.2	18.1	48.67%
128	21.1	17.26	81.74%
256	11.3	10.5	92.98%
512	5.87	5.71	97.27%
1024	3.03	2.91	97.32%

http://fast.dpdk.org/doc/perf/DPDK_17_05_Intel_NIC_performance_report.pdf

Adaptive Virtual Function (AVF)

AVF -- Adaptive Virtual Function

- **Needs:**
  - A **single** VF driver for all generations of Devices.
- **Solution:**
  - Adaptive Virtual Function
    - Base features
    - Negotiated Advanced Features
- **Benefits:**
  - Existing VM Images will run on the new hardware with **no change**.
- **From:**
  - Intel® 700 series Ethernet Controller

AVF – HW upgrade

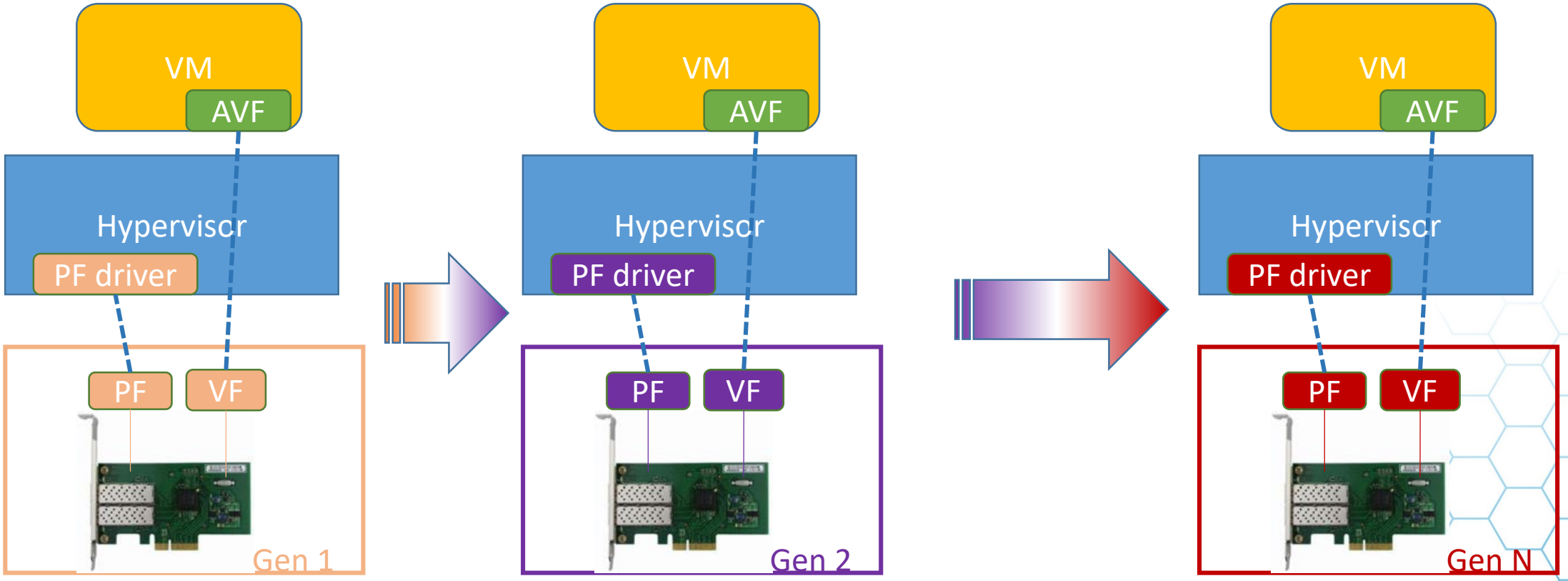

Hardware upgrade

AVF -- Adaptive Virtual Function

- **Base mode supported**
  - Single device ID
  - Support for single level checksum and TSO offload
  - Multi-queue support
  - RSS
- **Advanced features**
  - Advanced feature introduced by new generation HW.
  - Negotiate with PF driver to expose.

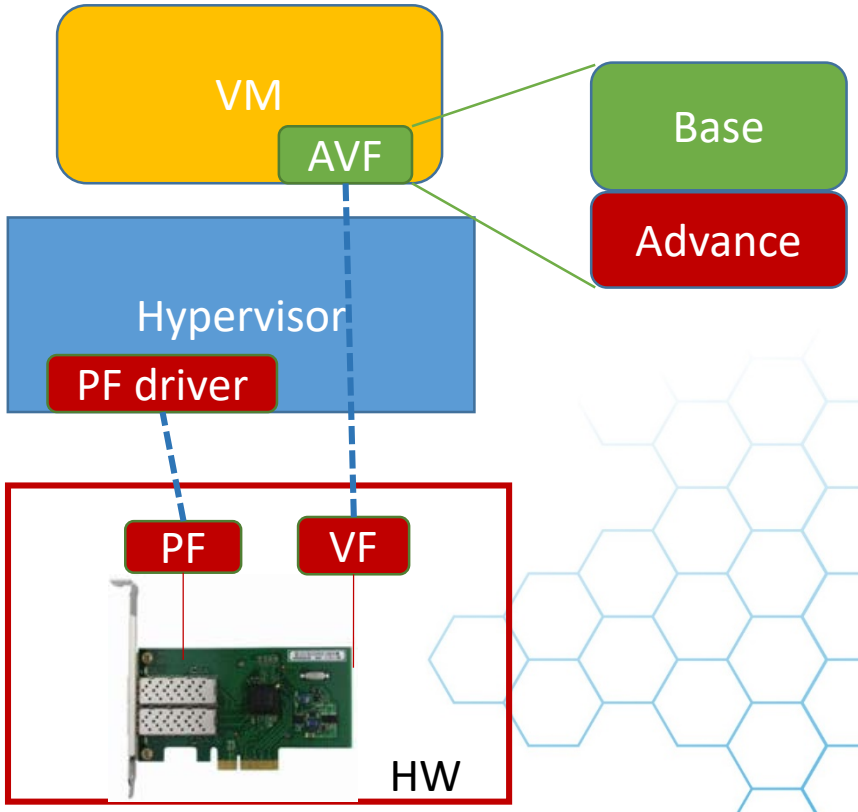

Preserving in Hardware and Software

- **Preserving Base mode**
  - Fixed Minimum Register definition
  - A fixed Meta data format for DMA
  - A Hardware generic mailbox to talk to the PF
  - A Software defined Virtual channel layered on top of Hardware mailbox for expansion
- **Room for expansion**
  - Uncompromising on the base functionality.
  - A large range for hot path registers (Queue and Interrupt)
  - Expandable Virtual channel capability negotiation over the agreed upon communication channel between PF and VF.
  - More advanced features would be added with new drops of AVF driver if the underlying HW device supports.
  - Intel is working on the AVF specification.

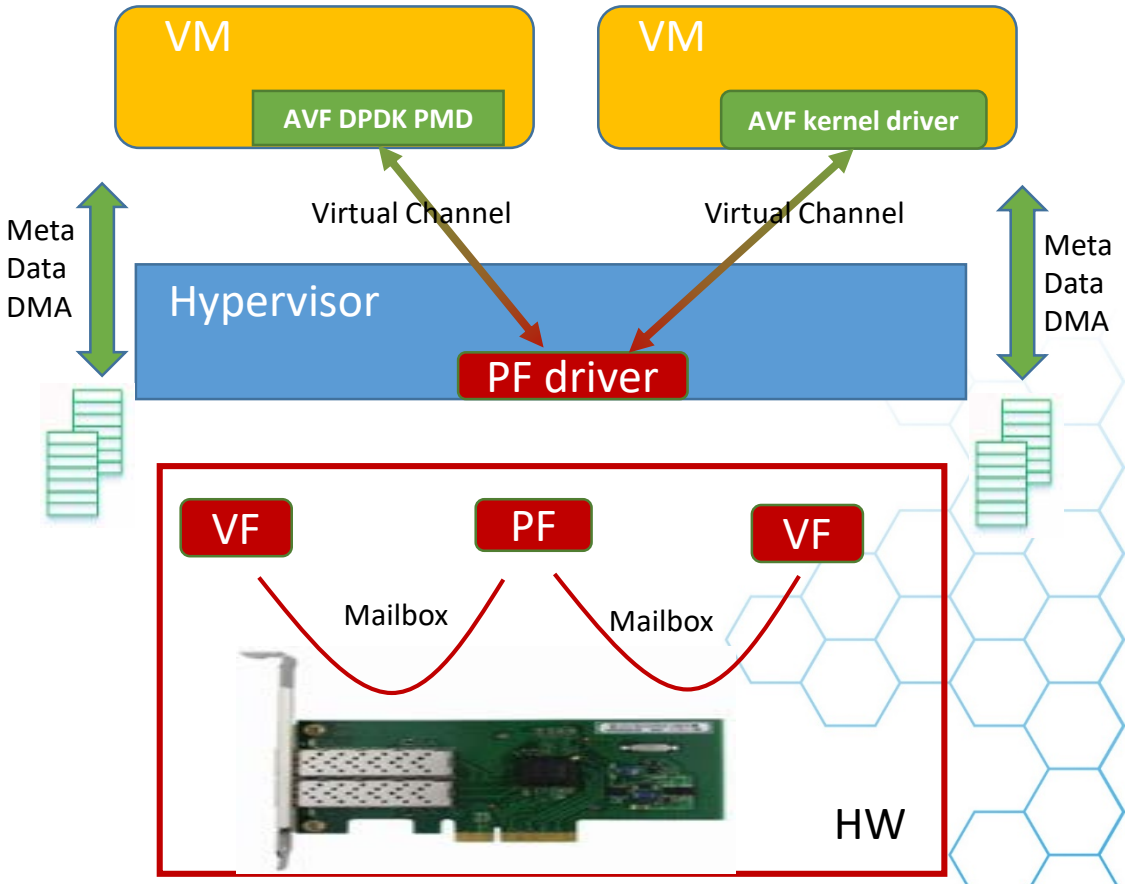

Key Takeaways

- **25GbE speed, and better hardware capability**
- **Generic, flexible and configurable flow classification**
- **NFV enabled with VFD**
- **Good performance**
- **Adaptive VF driver for all Intel® NICs from 700 series**

End

- Helin Zhang, helin.zhang@intel.com
- Jingjing Wu, jingjing.wu@intel.com

Thanks!!